SUBJECT : SCIENCE (PHY)

CHAPTER-12:
ELECTRICITY

TOPIC-1:

ELECTRIC CHARGE, CURRENT AND CIRCUIT

OBJECTIVE/LEARNING OUT COME:

1. TO KNOW THE IMPORTANCE OF ELECTRICITY
2. DEFINITION OF ELECTRIC CHARGE
3. PROPERTIES OF ELECTRIC CHARGES
4. UNITS USED TO MEASURE ELECTRIC CHARGES
5. TYPES OF ELECTRIC CHARGE AND EXAMPLES
6. SOLVING NUMERICALS
7. CHARGE OF ELECTRON & PROTON
8. DEFINITION OF ELECTRIC CURRENT
9. MATHEMATICAL EXPRESSION OF ELECTRIC CURRENT
10. UNITS USED TO MEASURE ELECTRIC CURRENT
11. SOLVING NUMERICAL BASED ON ELECTRIC CURRENT
12. DEFINITION OF ELECTRIC CIRCUIT
13. DRAWING OF ELECTRIC CIRCUIT USING SYMBOLS OF COMPONENTS

INTRODUCTION:

Electricity is a source of energy that has made our life comfortable and easy. We depend on electricity for almost all our activities in our day-to-day life. It is used to glow bulb, heat water, to operate refrigerator, to run factories and industries, to run fans, motors etc. there is hardly any field where electricity is not required. We understand its importance when electric supply breaks down.

ELECTRIC CHARGE:

A charge is a fundamental property of matter like mass in matter. Without mass a matter can not exist. Similarly without charge matter can not exist.

- Charge is the inherent property of matter that feels force of attraction or repulsion due to excess or deficiency of electrons.

PROPERTIES OF CHARGE:

- The total charge of the universe is conserved i.e. constant
- Like Charges attract each other and unlike charges repel each other
- Charges are additive in nature
- Charges are always quantized i.e. Q = n x e where q = charge, n = no. of electrons, e = charge on one electron i.e. 1.6×10^{-19} C

$$
\begin{aligned}
Q &= ne \\
&= e \quad \text{where } n = 1 \\
&= 2e \quad \text{where } n = 2 \\
&= 3e \quad \text{where } n = 3 \quad \text{so on}
\end{aligned}
$$

UNIT OF CHARGE:

- Its S.I. unit is Coulombs denoted by 'C'. Besides mili coulomb and micro coulomb are also used as unit of electric charge

TYPES OF CHARGE:

- It is of 2 types :

(a) Positive Charge (Due to electron deficiency) :example- proton
(b) Negative Charge (Due to excess of electrons):example: electron

ELECTRIC CURRENT:

The rate of flow of electric charge is called electric current.

$I = Q/t$ OR $I = ne/t$ where $Q = ne$

UNIT OF ELECTRIC CURRENT : C/s or Ampere(A)

Direction of electric current:

Direction of current is the same with the direction of positive charge but opposite to the direction of flow of electron.

Circuit Diagram

- We know that an electric circuit, as shown in Fig. 12.1, comprises a cell(or a battery), a plug key, electrical component(s), and connecting wires. It is often convenient to draw a schematic diagram, in which different components of the circuit are represented by the symbols conveniently used. Conventional symbols used to represent some of the most commonly used electrical components.

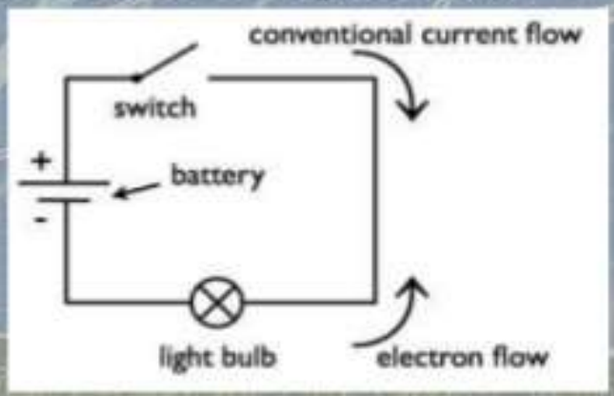

ELECTRIC COMPONENTS AND THEIR SYMBOLS

Sl. No.	Components	Symbols
1	An electric cell	
2	A battery or a combination of cells	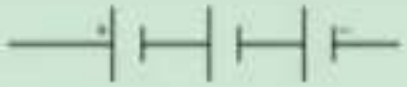
3	Plug key or switch (open)	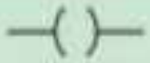
4	Plug key or switch (closed)	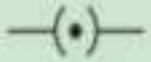
5	A wire joint	
6	Wires crossing without joining	
7	Electric bulb	 or 
8	A resistor of resistance *R*	
9	Variable resistance or rheostat	 or 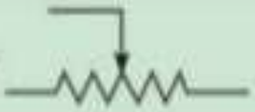
10	Ammeter	
11	Voltmeter	

QUESTIONS AND SOME NUMERICALS

Q.1 Which particles constitute the electric current in a metallic conductor?

ANS: Electrons are the negative charge particles constitute the electric current in metallic conductor.

Q.2 Calculate the number of electrons constituting one coulomb of charge? (Charge on one electron = 1.6×10^{-19}C)

Solution: Here given charge over 1 electron

$e = 1.6 \times 10^{-19}$ C

We know that $Q = ne$

$n = Q/e = 1/1.6 \times 10^{-19}$

$= 6.25 \times 10^{18}$ electron

Thus number of electrons in 1 C = 6.25×10^{18}

Q.3 The amount of charge passing through a cell in four seconds is 12 C. Find the current supplied by cell.

Solution:

Given,

Charge Q = 12 C

Time t = 4 s

Current = I = Q / t = 12/ 4 = 3 A

Q.4 Calculate the number of electrons that could flow per second through the cross section of a wire when 4 A current flows in it.

Given,

I = 4 A, t = 1 s

I = Q / t

Then charge, $Q = I \times t = 4\ A \times 1\ s = 4$ C. Now $n = 4 \times 6.25 \times 10^{18}$

$= 25 \times 10^{18}$

Q.5- What does an electric circuit mean?

ANSWER: The closed path through which electric current can pass is known as electric circuit.

Q.6: Define 1 Ampere current.

ANSWER: If 1 coulomb charge flows through any conductor in 1 second, then the amount of current is called 1 Ampere.

Q.7:In an electric circuit, state the relationship between the direction of conventional current and the direction of flow of electrons.

ANSWER: Electrons flows from negative terminal to positive terminal of cell where as current flows from +ve terminal to -ve terminal in external circuit i.e. Conventional current and electrons flow are opposite to each other.

Q.8: Define electric circuit. Distinguish between open and closed circuit (CBSE-2010)

ANSWER: Electric circuit is the arrangement in which electric current can flow when circuit is switched on. In open circuit there is no flow of current as the switch is off. In closed circuit a current flows in the circuit when switch is on.

Q.9:An electric appliance draws a current of 0.4 A when the voltage is 200 volt. Calculate the amount of charge flowing through it in one hour.

SOLUTION:

$Q = It$

Given, $I = 0.4$ A , $V = 200$ V, $t = 1$ hr $= 3600$ sec

Thus $Q = It = 0.4 \times 3600 = 1440$ C

Q.10: A current of 10 A flows through a conductor for two minutes :

(a) Calculate the amount of charge passed through unit area of cross section of the conductor.

(b) If the charge of an electron is 1.6×10^{-19} C then calculate the total number of electrons flowing.

Q11. What do you understand by electric charge and electric current

Q12. Write any three properties of electric charge

Q13. Write units of electric charge and electric current